卷册检索号 SEARCH NO. OF THE VOLUME
MLHVDC-LCS-CET-DD-EC-0208 49-B60011S-D0208

第 1 页 共 1 页
PAGE OF

图纸文件目录（首页）

CATALOG OF DRAWING DOCUMENTS (HEAD PAGE)

拉合尔±660kV换流站 工程 施工图 阶段
±660kV Lahore Converter Station PROJECT Detail Design DESIGN STAGE

电气 专业 第 02 卷 第 08 册
Electrical SPECIALITY VOLUME BOOK

卷册名称 SC交流滤波器小组设备安装图
Volume name SC AC filter group equipment installation diagram

批 准 APPROVED BY	张伟
审 核 REVIEWED BY	田俊强
设计/勘测 DESIGNED BY/ SURVEYED BY	唐华
图 纸 8 张 DRAWING NOS.	打印件 / 本 PRINTED COPIES NOS.

序号 No.	图 号 DRAWING NO.	文 件 名 称 DOCUMENT TITLE	版本 EDITION	张 NOS.	本 NOS.	备注 REMARKS
1	49-B60011S-D0208-001	卷册说明 Description of Construction	A	1		
2	49-B60011S-D0208-002	SC交流滤波器小组电容器(C1)及电流互感器(T1)设备安装图 SC AC Filter Group Capacitor (C1) and CT (T1) Installation Diagram	A	1		
3	49-B60011S-D0208-003	SC交流滤波器小组电抗器(L1)设备安装图 SC AC Filter Group Reactor (L1) Installation Diagram	A	1		
4	49-B60011S-D0208-004	SC交流滤波器小组避雷器(F1)设备安装图 SC AC Filter Group Arrester (F1) Installation Diagram	A	1		
5	49-B60011S-D0208-005	SC交流滤波器小组电流互感器(T2)设备安装图 SC AC Filter Group CT(T2) Installation Diagram	A	1		
6	49-B60011S-D0208-006	SC交流滤波器小组35kV支柱绝缘子设备安装图 SC AC Filter Group 35kV Post Insulator Installation Diagram	A	1		
7	49-B60011S-D0208-007	SC交流滤波器小组围栏接地图 SC AC Filter Group Fence Grounding Diagram	A	1		
8	49-B60011S-D0208-008	部分材料汇总表 Partial Material Summary	A	1		

注： 本工程初步设计尚未审定，未通过NTDC审核，图纸存在修改的可能，本册图纸施工前请联系CET确认。

The preliminary design of this project has not been approved and has not been approved by NTDC.

The modification is possible in this diagram. Please contact CET for confirmation before construction.

Description of Construction

1. This volume is only used for equipment installation of 500kV SC AC filter groups.
2. The equipment suppliers in the 500kV SC AC filter groups are as follows:

Device name	Supplier
Capacitor C1	Guilin Power Capacitor Co., Ltd.
Reactor L1	Beijing Power Equipment Group Co., Ltd.
Current transformer T1	Hunan Electric Porcelain Appliances Co., Ltd.
Current transformer T2	Anhui Transformer Co., Ltd.
Arrester F1	Fushun Electric Procelain Manufacturing Co., Ltd.
35kV post insulator	Fushun Electric Procelain Manufacturing Co., Ltd.

3. After the equipment arrives, please check whether the diagrams are consistent with the actual equipment size.
4. Check the reserved holes (if any) before installation.
5. The grounding terminals of all equipment should be reliably grounded. If the equipment is installed on the bracket, the grounding terminal of the equipment is connected to the bracket by 150mm^{2}copper stranded wire. The bracket is connected with the main earthing grid by 150mm^{2}copper stranding wire. If the equipment is directly installed on the foundation, the grounding terminal is connected with the main earthing grid by 150mm^{2}copper stranding wire.
6. In order to reduce the contact resistance, the paint layer at the grounding point should be removed first, and then sprayed and anti-corrosive treated after the connection is completed.
7. For the SLD and layout diagram of the SC AC filter group, see the "B60011S-D0207" volume.
8. Only the main materials such as copper strands for equipment grounding are listed in the material summary table.
9. The Anchor bolts for equipment installation are supplied by the manufacturer and should be pre-buried by the civil contractor.
10. The connection between the equipment grounding conductor and the main ground network is exothermic welding, and the quantity is listed in this volume.

卷册说明

1. 本卷册仅用于500kV交流滤波器组SC围栏内设备安装。
2. 本工程500kV交流滤波器组SC围栏内设备供货商如下:

设备名称	供货单位
电容器C1	桂林电力电容器有限责任公司
电抗器L1	北京电力设备总厂有限公司
电流互感器T1	湖南电力电瓷电器有限公司
电流互感器T2	安徽互感器有限公司
避雷器F1	抚顺电瓷制造有限公司
35kV支柱绝缘子	抚顺电瓷制造有限公司

3. 设备到货后,请核对厂家资料与实际设备尺寸是否保持一致,核对设备端子板开孔尺寸,并配合好相应金具开孔。
4. 安装前请核对土建预留孔(若有)。
5. 所有设备的接地端子应可靠接地。如果设备安装在支架上,设备接地端子采用150mm^{2}铜绞线与支架连接,支架采用150mm^{2}铜绞线与主接地网连接;如果设备直接安装在基础上,设备接地端子采用150mm^{2}铜绞线与主接地网连接。
6. 钢支架预留接地点,接地端子与设备底座和接地母线连接时,为减小接触电阻,应先去除钢支架接地点处的喷漆层,待连接完成后再进行喷锌及防腐处理。
7. SC交流滤波器小组接线及平、断面图见"B60011S-D0207"分册。
8. 材料汇总表中仅开列设备接地用的铜绞线等主要安装材料。
9. 设备安装用地脚螺栓均由厂家供货,土建承包人预埋。
10. 设备引下线与主地网的连接采用放热焊接,数量已开列于本分册。

巴基斯坦默蒂亚里—拉合尔±660kV直流输电工程 ±660kV HVDC Project from Matiari to Lahore in Pakistan		NATIONAL TRANSMISSION & DESPATCH COMPANY (NTDC) LIMITED PAKISTAN	
CONTRACTOR 国家电网 STATE GRID 中国电力技术装备有限公司 CHINA ELECTRIC POWER EQUIPMENT AND TECHNOLOGY CO.,LTD.			
拉合尔±660kV换流站 ±660kV Lahore Converter Station		设计阶段 PHASE	施工图 Detailed Design
M L H V D C - L C S - C E T - D D - E C - 0 2 0 8 - 0 0 1 A			
	姓名 Name	日期 Date	卷册说明 Description of Construction
设计 Designed	唐华	2018.12.30	
校核 Checked	苏斌	2018.12.30	
审核 Reviewed	田俊强	2018.12.30	
批准 Approved	张伟	2018.12.30	
比例 Scale 1:10	图号 DWG NO.	B60011S-D0208-001	版本 REV. A

420X594

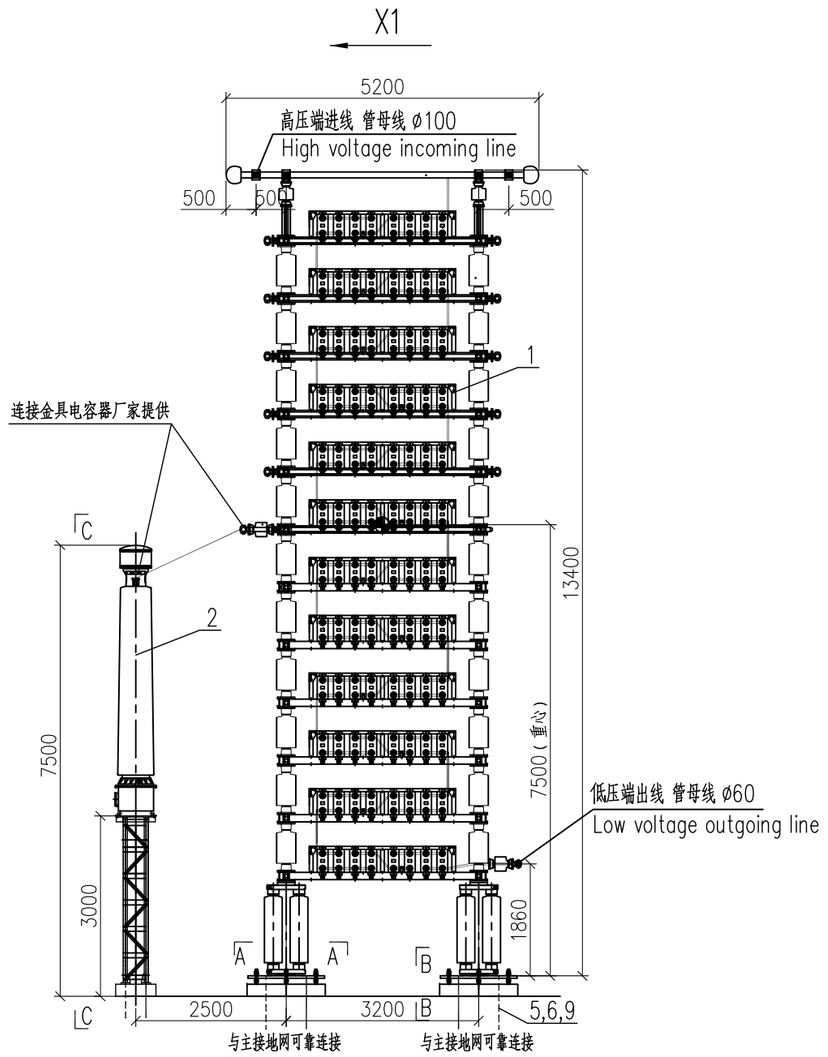

电容器塔及CT正视图

Capacitor tower and CT front view

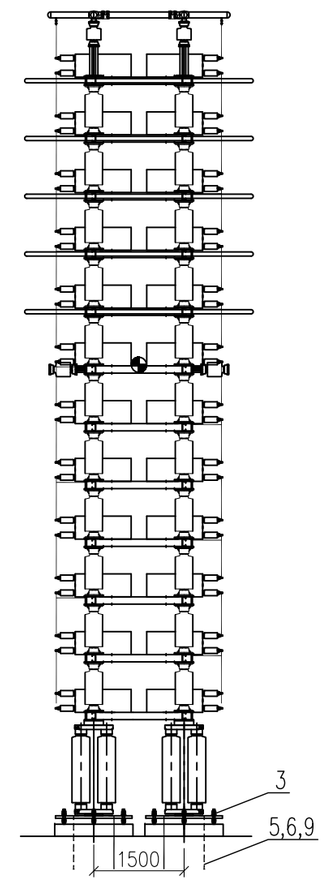

电容器塔及CT侧视图

Capacitor tower and CT side view

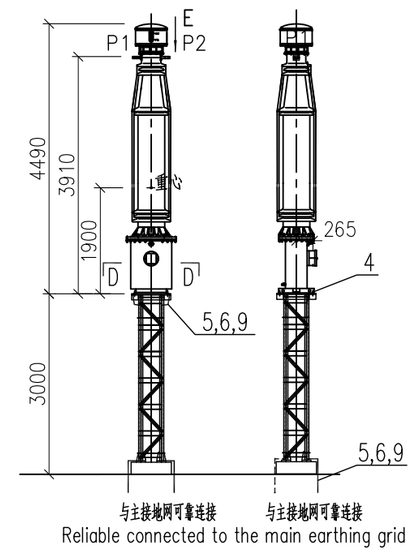

C–C CT详图

C–C CT Detail

E视图 E View

一次接线端子(铜)

Primary terminal (copper)

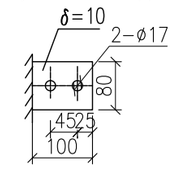

D–D

CT支架杆头板尺寸详图

CT foundation plate details

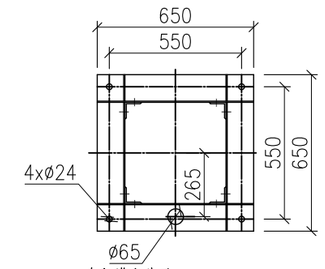

二次电缆出线孔

Secondary cable outlet

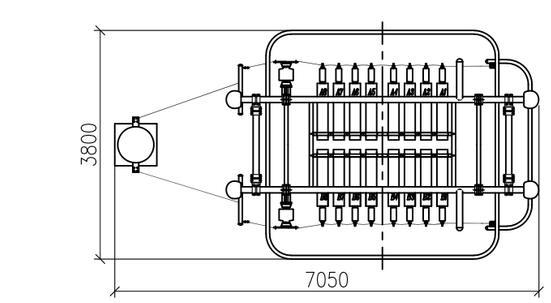

电容器塔及CT俯视图

Capacitor tower and CT top view

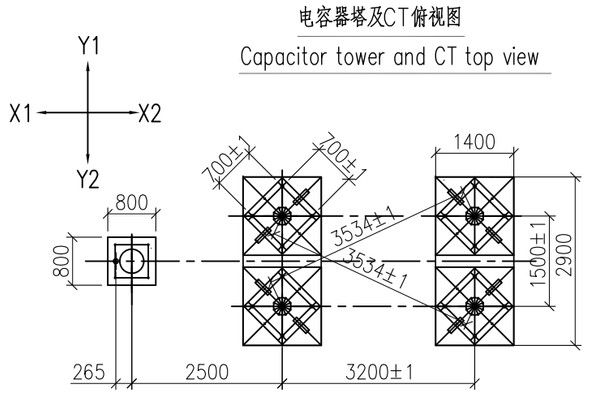

电容器塔及CT基础图

Capacitor tower and CT foundation drawing

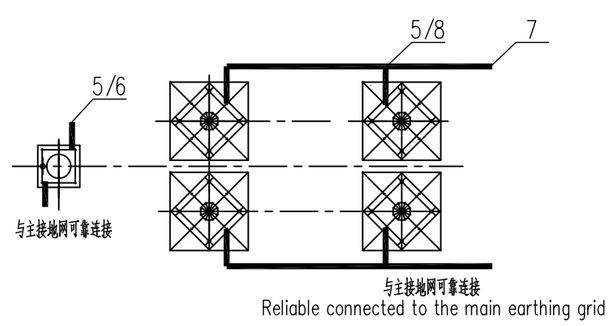

电容器塔及CT接地图

Capacitor tower and CT grounding drawing

A–A

电容器塔地脚钢板尺寸详图

Capacitor tower steel plate detail

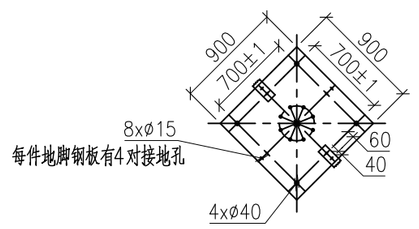

B–B

地脚钢板安装示意

Plate installation

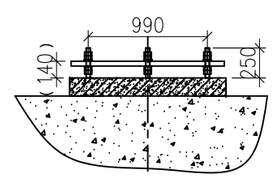

地脚紧固件定位示意

Fastener positioning

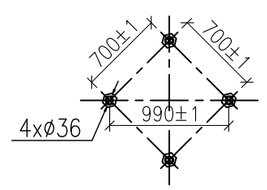

地脚螺栓详图

Anchor bolt detail

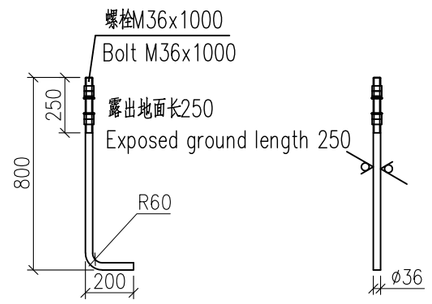

说明:

1.本图表示单相设备，其余两相设备完全相同，材料表中按组开列。

2.全站SC交流滤波器共8组，共24台该设备，具体位置见平面布置图。

3.图中X1、X2、Y1、Y2为安装方向，与平面布置图中方向对应。

4.电容器与CT的设备间连线及导线线夹由电容器厂家提供，并指导安装。

Note:

1. This drawing shows a single-phase device, the other two phase devices are identical, and the material table is listed by group.
2. There are 8 groups SC AC filters in the station, a total of 24 such devices. The plan shows the specific location.
3. In the drawing, X1, X2, Y1, and Y2 are the mounting directions, which correspond to the directions in the plan.
4. The connection and clamps between the capacitor and the CT are provided by the capacitor manufacturer, Manufacturer show guide the installation.

材料表

Table of Equipment and materials

序号	名称	型号及规范	单位	数量	备注
1	电容器C1	TBB510-111552/581-1QW	台	3	桂林电力电容器有限责任公司 开列在B60011S-D0207分册
2	电流互感器T1	LB7-330 0.5/1A, 0.2/0.2, 5VA/5VA	台	3	湖南电力电瓷电器有限公司 开列在B60011S-D0207分册
3	地脚螺栓	M36x1000(附配双平垫、单弹垫、四螺母等)	套	48	电容器厂家提供，土建预埋
4	螺栓	M22x80,热镀锌(附螺帽，2个平垫，1个弹垫等)	个	12	电流互感器安装 乙供
5	铜绞线	150mm²	米	90	乙供
6	铜线鼻	DTM-150	套	30	乙供
7	放热焊接点	150mm²铜绞线与120mm²铜绞线焊接	个	12	乙供
8	放热焊接点	150mm²铜绞线与150mm²铜绞线焊接	个	6	乙供
9	螺栓(接地用)	M14x45,热镀锌(附螺帽，2个平垫，1个弹垫等)	个	30	乙供

NO.	Name	Type	Unit	QTY.	Note
1	Capacitor C1	TBB510-111552/581-1QW	set	3	Guilin Power Capacitor Co., Ltd. Listed in B60011S-D0207
2	Current Transformer (T1)	LB7-330 0.5/1A, 0.2/0.2, 5VA/5VA	set	3	Hunan Electric Porcelain Appliances Co., Ltd. Listed in B60011S-D0207
3	Anchor bolt	M36x1000(with 2 flat pads, spring pad, 4 nuts, etc.)	set	48	Provided by capacitor manufacturers pre-buried by the civil constructor
4	Bolt	M22x80, Hot-dip galvanizing with Nuts, 2 Flat Pads, 1 Spring Pad, etc.	set	12	For capacitor CT installation
5	Copper strand wire	150mm²	m	90	
6	Copper lug	DTM-150	set	30	
7	Exothermic welding point	A: 150mm²copper strand;B: 120mm²copper strand	set	12	
8	Exothermic welding point	A: 150mm²copper strand;B: 150mm²copper strand	set	6	
9	Bolt (for grounding)	M14x45, Hot-dip galvanizing with Nuts, 2 Flat Pads, 1 Spring Pad, etc.	set	30	

巴基斯坦默蒂亚里—拉合尔±660kV直流输电工程

±660kV HVDC Project from Matiari to Lahore in Pakistan

NATIONAL TRANSMISSION & DESPATCH COMPANY (NTDC) LIMITED PAKISTAN

CONTRACTOR 国家电网 STATE GRID 中国电力技术装备有限公司 CHINA ELECTRIC POWER EQUIPMENT AND TECHNOLOGY CO.,LTD.

拉合尔±660kV换流站

±660kV Lahore Converter Station

设计阶段 PHASE: 施工图 Detailed Design

M L H V D C - L C S - C E T - D D - E C - 0 2 0 8 - 0 0 2 A

	姓名 Name	日期 Date
设计 Designed	唐华	2018.12.30
校核 Checked	葛斌	2018.12.30
审核 Reviewed	田俊强	2018.12.30
批准 Approved	刘伟	2018.12.30

SC交流滤波器小组电容器(C1)及电流互感器(T1)设备安装图

SC AC Filter Group Capacitor (C1) and CT (T1) Installation Diagram

比例 Scale: 1:100 | 图号 DWG NO.: B60011S-D0208-002 | 版本 REV.: A

420X594

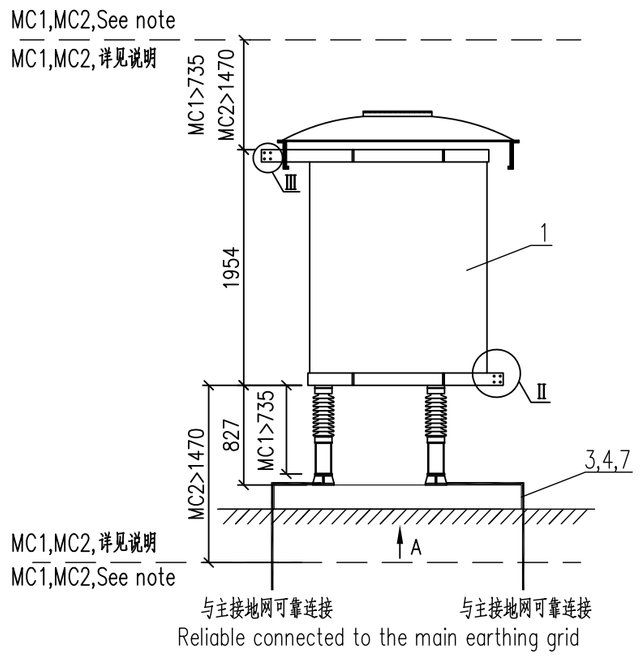

详图Ⅱ Ⅲ Detail Ⅱ Ⅲ

Aluminum terminal detail

一次接线端子(铝合金)

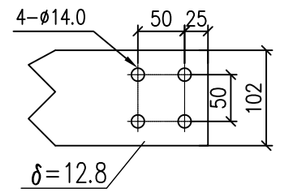

详图Ⅰ Detail Ⅰ

电抗器基础详图

Reactor foundation detail

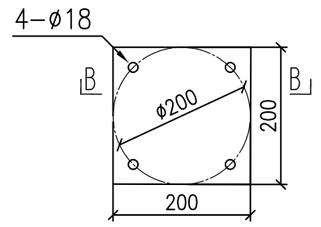

B-B

预埋地脚螺栓详图

Anchor bolt detail

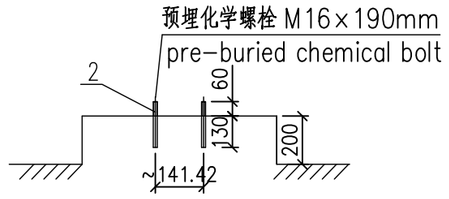

A向

底座安装图

Base installation diagram

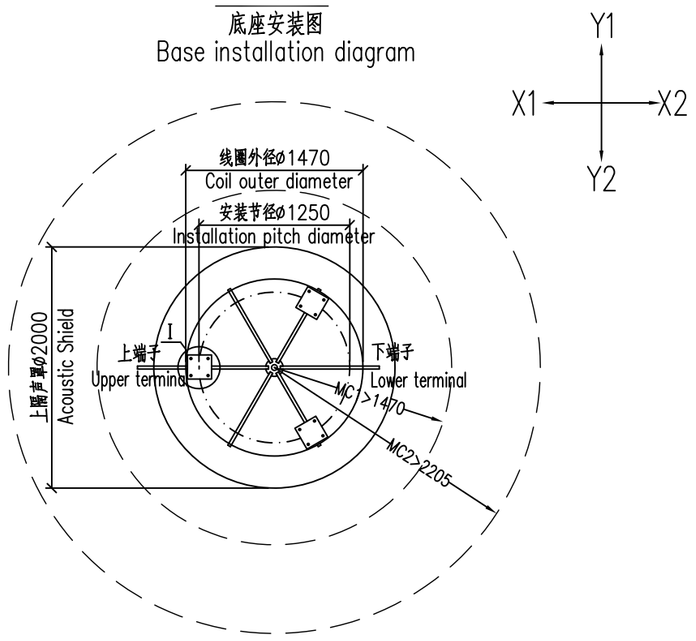

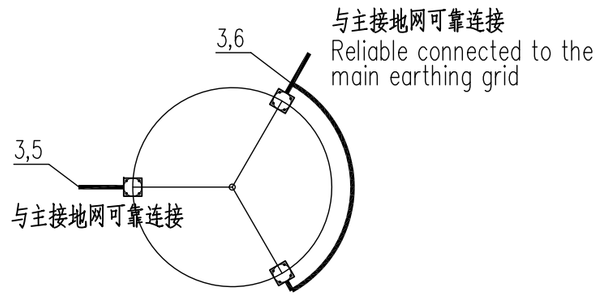

接地示意图

Grounding diagram

说明:

1.本图表示单相设备,其余两相设备完全相同,材料表中按组开列.
2.全站SC交流滤波器有8组,共24台该设备,具体位置见平面布置图.
3.图中X1、X2、Y1、Y2为安装方向,与平面布置图中方向对应.
4.电抗器基础钢筋应采取措施有效绝缘隔离,以避免形成闭合回路.
5.图中不形成闭合回路的小型铁磁体与电抗器表面和上下吊臂的间距应不小于MC1.
6.图中形成闭合回路的铁磁体与电抗器表面和上下吊臂的间距应不小于MC2.
7.电抗器的地脚螺栓由设备厂家提供,在设备基础施工时由土建承包人直接预埋.

Note:

1. This drawing shows a single-phase device, the other two phase devices are identical, and the material table is listed by group.
2. There are 8 groups SC AC filters in the station, a total of 24 such devices. The plan shows the specific location.
3. In this drawing, X1, X2, Y1, and Y2 are the mounting directions, which correspond to the directions in the plan.
4. Reactor base steel bars should take effective measures to insulation, to avoid forming a closed loop.
5. The distance between the small ferromagnet which do not form a closed loop, and the reactor surface should be not less than MC1.
6. The distance between the ferromagnetic which forming the closed loop and the surface of the reactor should be not less than MC2.
7. The anchor bolts of the reactor are provided by the equipment manufacturer and are directly pre-buried by the civil contractor during the foundation construction.

材料表

Table of Equipment and materials

序号	名 称	型号及规范	单位	数量	备 注
1	电抗器(L1)	ZKK-20-290.1-1	台	3	北京电力设备总厂有限公司 开列在B60011S-D0207分册
2	地脚螺栓	化学螺栓 M16x190	套	36	电抗器厂家提供,土建预埋
3	铜绞线	150mm^2	米	45	乙供
4	铜线鼻	DTM-150	套	9	乙供
5	放热焊接点	150mm^{2}铜绞线与120mm^{2}铜绞线焊接	个	6	乙供
6	放热焊接点	150mm^{2}铜绞线与150mm^{2}铜绞线焊接	个	3	乙供
7	螺栓(接地用)	M14x45,热镀锌(附螺帽,2个平垫,1个弹垫等)	个	9	乙供

NO.	Name	Type	Unit	QTY.	Note
1	Reactor (L1)	ZKK-20-290.1-1	set	3	Beijing Power Equipment Group Co., Ltd. Listed in B60011S-D0207
2	Anchor bolt	Chemical bolt M16x190	set	36	Provided by reactor manufacturers buried in civil engineering
3	Copper strand wire	150mm^2	set	45	
4	Copper lug	DTM-150	m	9	
5	Exothermic welding point	A: 150mm^{2}copper strand;B: 120mm^{2}copper strand	set	6	
6	Exothermic welding point	A: 150mm^{2}copper strand;B: 150mm^{2}copper strand	set	3	
7	Bolt (for grounding)	M14x45, Hot-dip galvanizing with Nuts, 2 Flat Pads, 1 Spring Pad, etc.	set	9	

巴基斯坦默蒂亚里—拉合尔±660kV直流输电工程

±660kV HVDC Project from Matiari to Lahore in Pakistan

NATIONAL TRANSMISSION & DESPATCH COMPANY (NTDC) LIMITED PAKISTAN

CONTRACTOR 国家电网 STATE GRID 中国电力技术装备有限公司 CHINA ELECTRIC POWER EQUIPMENT AND TECHNOLOGY CO.,LTD.

拉合尔±660kV换流站

±660kV Lahore Converter Station

设计阶段 PHASE: 施工图 Detailed Design

M L H V D C - L C S - C E T - D D - E C - 0 2 0 8 - 0 0 3 A

	姓名 Name	日期 Date
设计 Designed	唐华	2018.12.30
校核 Checked	高成	2018.12.30
审核 Reviewed	田俊强	2018.12.30
批准 Approved	[illegible]	2018.12.30
比例 Scale	1:50	图号 DWG NO.

SC交流滤波器小组电抗器(L1)设备安装图

SC AC Filter Group Reactor (L1) Installation Diagram

B60011S-D0208-003

版本 REV. A

420X594

A向

顶部接线端子

Top terminal

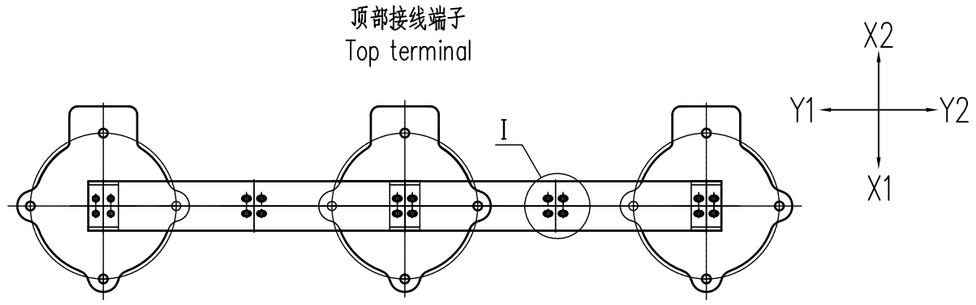

A

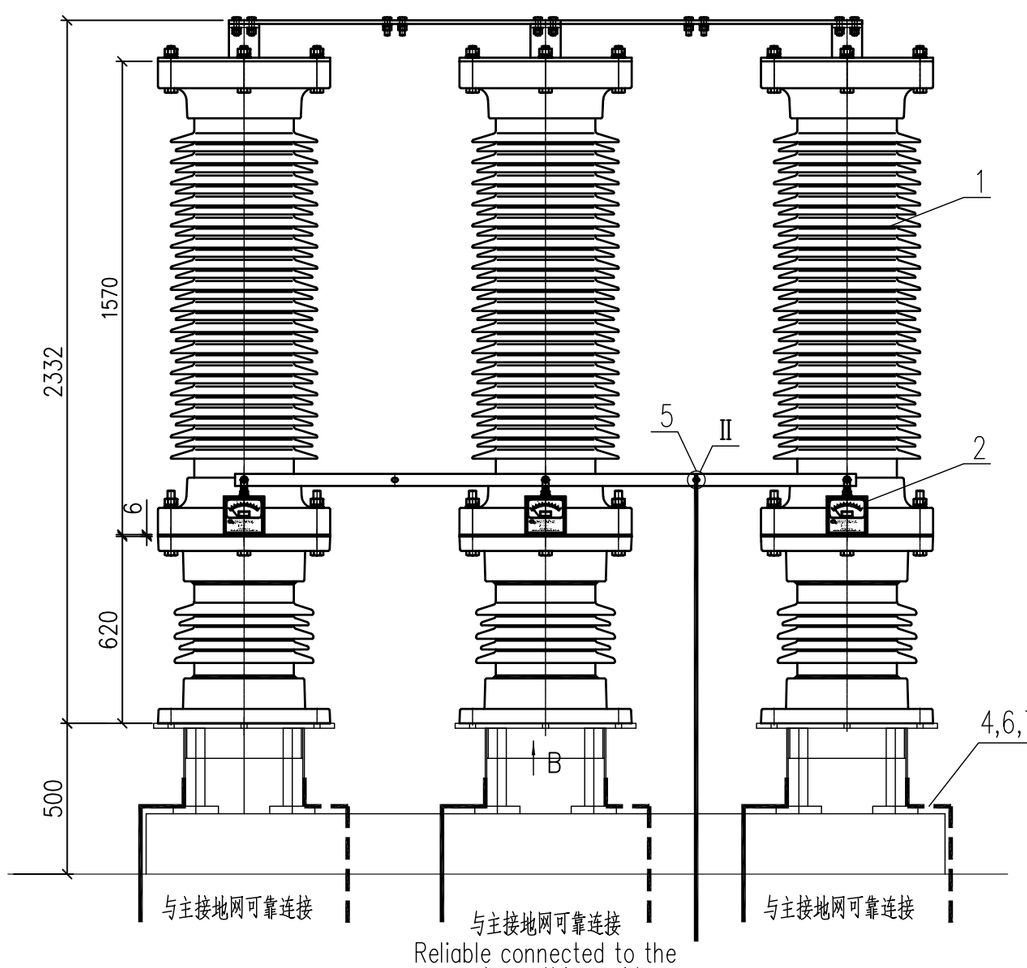

Reliable connected to the main earthing grid

侧视图

Side view

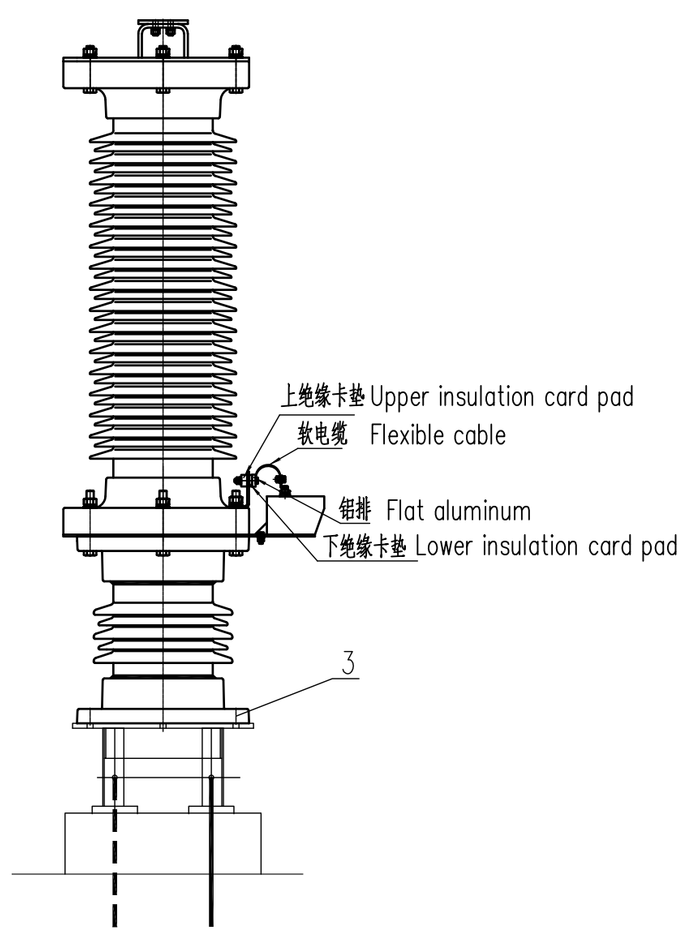

Reliable connected to the main earthing grid

B向

底座安装尺寸

Base mounting size

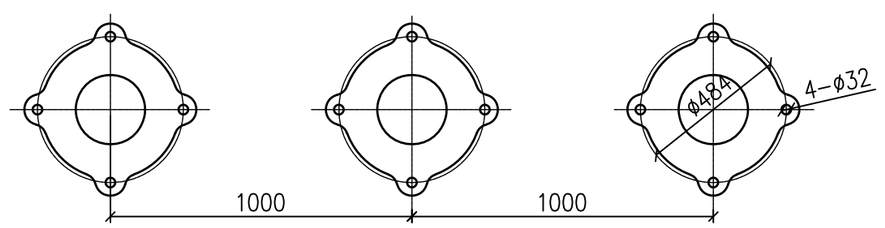

详图Ⅰ Detail Ⅰ

一次接线端子(铝)

Primary terminal block(aluminum)

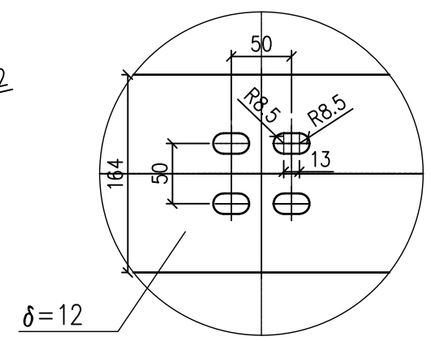

详图Ⅱ

接地孔(铝)

Grounding hole (aluminum)

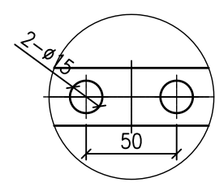

说明:

1.本图表示单相设备,其余两相设备完全相同,材料表中按组开列.

2.全站SC交流滤波器共8组,共24台该设备,具体位置见平面布置图.

3.图中X1、X2、Y1、Y2为安装方向,与平面布置图中方向对应。

Note:

1. This drawing shows a single-phase device, the other two phase devices are identical, and the material table is listed by group.

2. There are 8 groups SC AC filters in the station, a total of 24 such devices. The plan shows the specific location.

3. In this drawing, X1, X2, Y1, and Y2 are the mounting directions, which correspond to the directions in the plan.

材料表

Table of Equipment and materials

序号	名称	型号及规范	单位	数量	备注
1	避雷器(F1)	Y67W1-144/351W	台	3	抚顺电瓷制造有限公司 开列在B60011S-D0207分册
2	监测器		台	3	厂家成套提供
3	螺栓(设备安装用)	M30x75,热镀锌(附螺帽,2个平垫,1个弹垫等)	套	36	乙供
4	铜绞线	150mm^2	米	35	乙供
5	铜铝过渡线鼻子	DTL-150	套	3	乙供
6	铜线鼻	DTM-150	套	18	乙供
7	放热焊接点	150mm^{2}铜绞线与120mm^{2}铜绞线焊接	个	21	乙供
8	螺栓(接地用)	M14x45,热镀锌(附螺帽,2个平垫,1个弹垫等)	套	21	乙供

NO.	Name	Type	Unit	QTY.	Note
1	Arrester (F1)	Y67W1-144/351W	set	3	Fushun Electric Procelain Manufacturing Co., Ltd. Listed in B60011S-D0207
2	Monitor		set	3	Provided by the manufacturer
3	Bolt (for equipment installation)	M30x75, Hot-dip galvanizing with Nuts, 2 Flat Pads, 1 Spring Pad, etc.	set	36	With nut, spring washer and washer
4	Copper strand wire	150mm²	m	35	
5	Copper-Aluminum Terminal	DTL-150	set	3	
6	Copper lug	DTM-150	set	18	
7	Exothermic welding point	A: 150mm²copper strand;B: 120mm²copper strand	set	21	
8	Bolt (for grounding)	M14x45, Hot-dip galvanizing with Nuts, 2 Flat Pads, 1 Spring Pad, etc.	set	21	

巴基斯坦默蒂亚里—拉合尔±660kV直流输电工程

±660kV HVDC Project from Matiari to Lahore in Pakistan

NATIONAL TRANSMISSION & DESPATCH COMPANY (NTDC) LIMITED PAKISTAN

CONTRACTOR 国家电网 STATE GRID

中国电力技术装备有限公司 CHINA ELECTRIC POWER EQUIPMENT AND TECHNOLOGY CO.,LTD.

拉合尔±660kV换流站

±660kV Lahore Converter Station

设计阶段 PHASE: 施工图 Detailed Design

M L H V D C - L C S - C E T - D D - E C - 0 2 0 8 - 0 0 4 A

	姓名 Name	日期 Date
设计 Designed	唐华	2018.12.30
校核 Checked	高斌	2018.12.30
审核 Reviewed	田俊强	2018.12.30
批准 Approved	刘伟	2018.12.30
比例 Scale	1:20	图号 DWG NO.

SC交流滤波器小组避雷器(F1)设备安装图

SC AC Filter Group Arrester(F1) Installation Diagram

B60011S-D0208-004

版本 REV. A

420X594

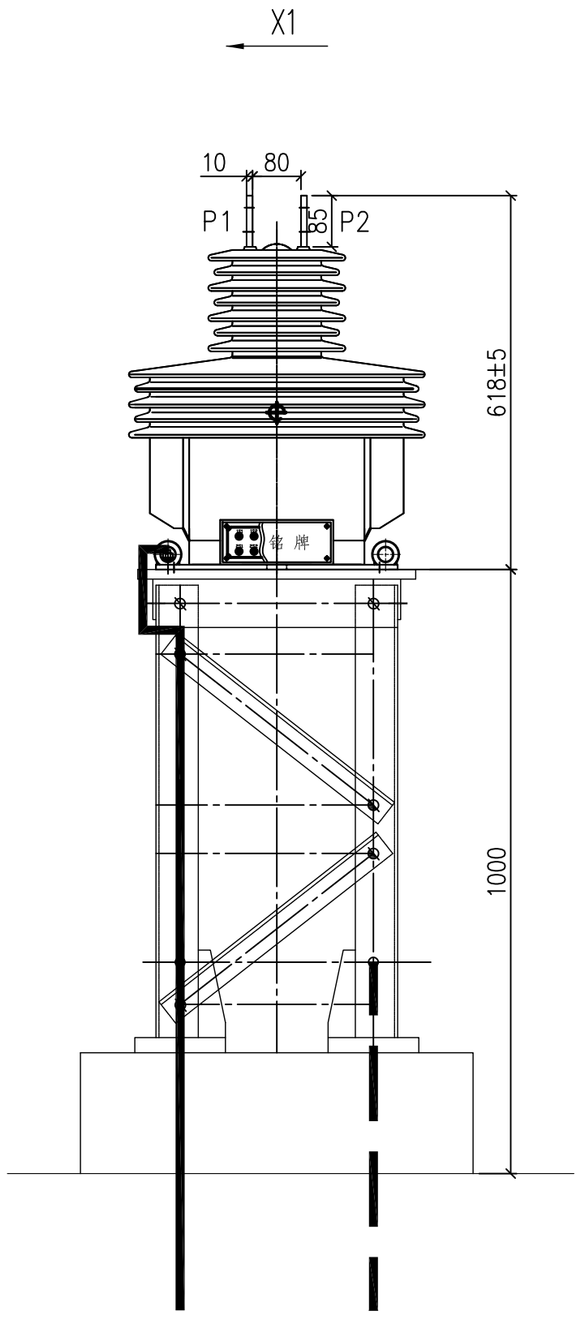

与主接地网可靠连接
Reliable connected to the main earthing grid

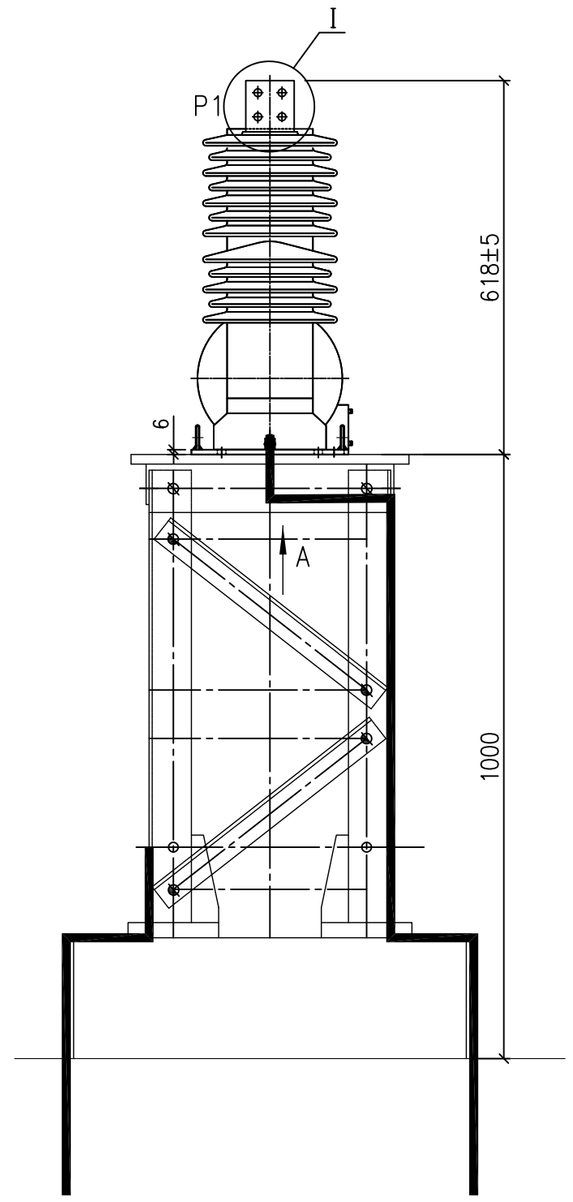

与主接地网可靠连接
Reliable connected to the main earthing grid

与主接地网可靠连接
Reliable connected to the main earthing grid

详图Ⅰ Detail Ⅰ

一次接线端子（铜）

Primary terminal block (copper)

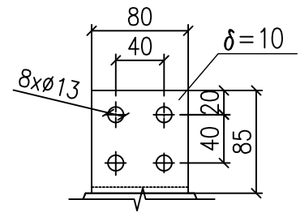

A向

底座安装尺寸

Base mounting size

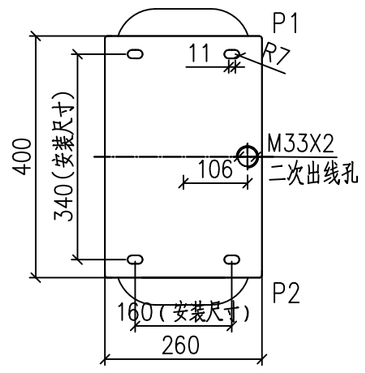

说明:

1. 本图表示单相设备,其余两相设备完全相同,材料表中按组开列.
2. 全站SC阻尼交流滤波器共8组,共24台该设备，具体位置见平面布置图。
3. 图中X1、X2、Y1、Y2为安装方向，与平面布置图中方向对应。

Note:

1. This drawing shows a single-phase device, the other two phase devices are identical, and the material table is listed by group.
2. There are 8 groups SC AC filters in the station, a total of 24 such devices. The plan shows the specific location.
3. In this drawing, X1, X2, Y1, and Y2 are the mounting directions, which correspond to the directions in the plan.

材 料 表

Table of Equipment and materials

序号	名 称	型号及规范	单位	数量	备 注
1	电流互感器(T2)	LZZBJ-24W 500/1A,5P40/5P40/0.2/0.2,5VA	台	3	安徽互感器有限公司 开列在B60011S-D0207分册
2	螺栓(设备安装用)	M6x50,热镀锌(附螺帽，2个平垫，1个弹垫等)	套	12	乙供
3	铜绞线	150mm^2	米	30	乙供
4	铜线鼻	DTM-150	套	18	乙供
5	放热焊接点	150mm^{2}铜绞线与120mm^{2}铜绞线焊接	个	6	乙供
6	螺栓(接地用)	M14x45,热镀锌(附螺帽，2个平垫，1个弹垫等)	套	18	乙供
NO.	Name	Type	Unit	QTY.	Note
1	Current Transformer (T2)	LZZBJ-24W 500/1A,5P40/5P40/0.2/0.2,5VA	台	3	Anhui Transformer Co., Ltd. Listed in B60011S-D0207
2	Bolt (for equipment installation)	M6x50, Hot-dip galvanizing with Nuts, 2 Flat Pads, 1 Spring Pad, etc.	set	12	
3	Copper strand wire	150mm^2	m	30	
4	Copper lug	DTM-150	set	18	
5	Exothermic welding point	A: 150mm^{2}copper strand;B: 120mm^{2}copper strand	set	6	
6	Bolt (for grounding)	M14x45, Hot-dip galvanizing with Nuts, 2 Flat Pads, 1 Spring Pad, etc.	set	18	

巴基斯坦默蒂亚里—拉合尔±660kV直流输电工程

±660kV HVDC Project from Matiari to Lahore in Pakistan

NATIONAL TRANSMISSION & DESPATCH COMPANY (NTDC) LIMITED PAKISTAN

CONTRACTOR 国家电网 STATE GRID 中国电力技术装备有限公司 CHINA ELECTRIC POWER EQUIPMENT AND TECHNOLOGY CO.,LTD.

拉合尔±660kV换流站

±660kV Lahore Converter Station

设计阶段 PHASE: 施工图 Detailed Design

M L H V D C - L C S - C E T - D D - E C - 0 2 0 8 - 0 0 5 A

	姓名 Name	日期 Date
设 计 Designed	唐华	2018.12.30
校 核 Checked	高威	2018.12.30
审 核 Reviewed	田俊强	2018.12.30
批 准 Approved	张伟	2018.12.30

SC交流滤波器小组电流互感器(T2)设备安装图

SC AC Filter Group CT(T2) Installation Diagram

比例 Scale: 1:10 | 图号 DWG NO.: B60011S-D0208-005 | 版本 REV.: A

420X594

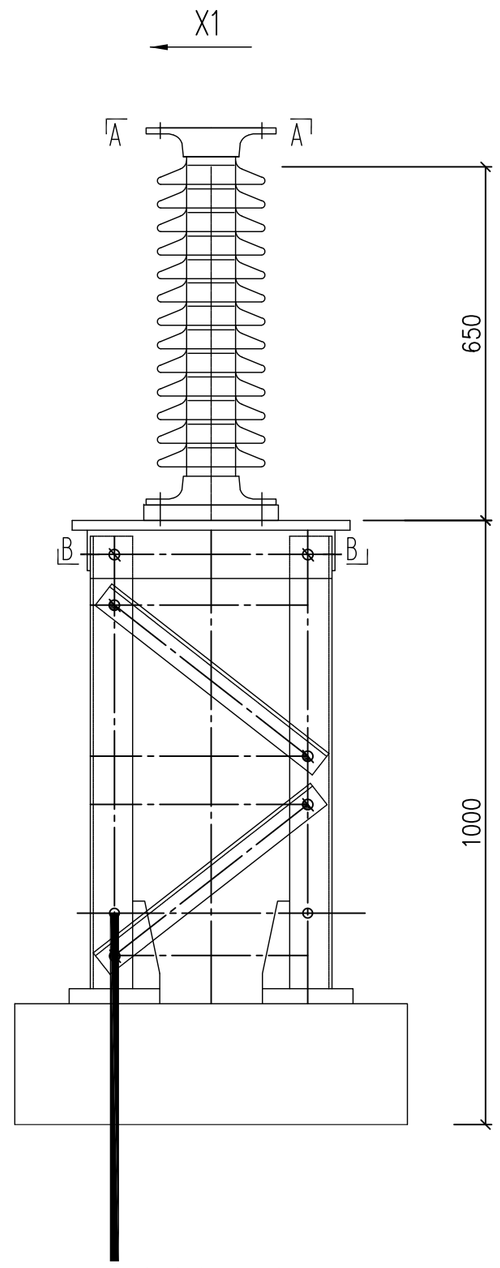

A–A

顶部安装图

Top installation diagram

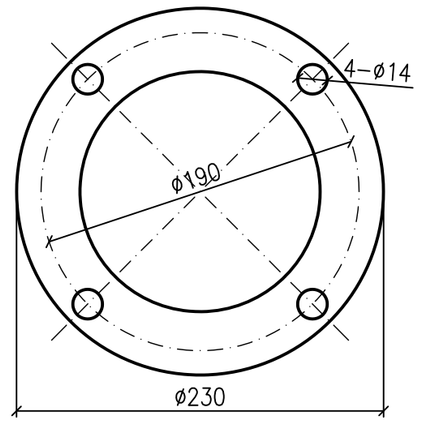

B–B

底部安装图

Bottom installation diagram

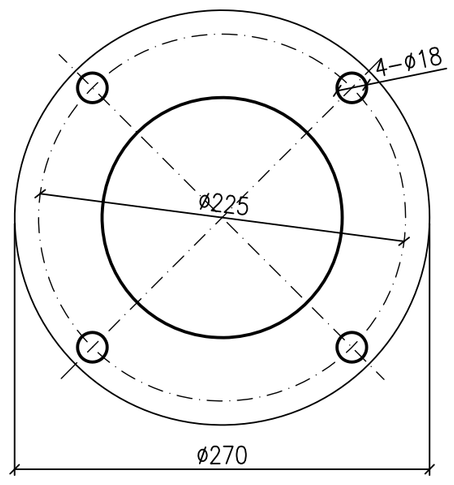

说明:

1. 本图表示单体设备,同类设备安装方式完全相同,材料表中按组开列.
2. 全站SC交流滤波器共8组,共32台该设备,具体位置见平面布置图。
3. 图中X1、X2、Y1、Y2为安装方向,与平面布置图中方向对应。

Note:

1. This drawing shows a single-phase device, the other two phase devices are identical, and the material table is listed by group.
2. There are 8 groups SC AC filters in the station, a total of 32 such devices. The plan shows the specific location.
3. In this drawing, X1, X2, Y1, and Y2 are the mounting directions, which correspond to the directions in the plan.

材料表

Table of Equipment and materials

序号	名称	型号及规范	单位	数量	备注
1	支柱绝缘子	35kV	台	4	抚顺电瓷制造有限公司 开列在B60011S-D0207分册
2	螺栓(设备安装用)	M16x75,热镀锌(附螺帽,2个平垫,1个弹垫等)	套	16	乙供
3	铜绞线	150mm^2	米	20	乙供
4	铜线鼻	DTM-150	套	4	乙供
5	放热焊接点	150mm^{2}铜绞线与120mm^{2}铜绞线焊接	个	4	乙供
6	螺栓(接地用)	M14x45,热镀锌(附螺帽,2个平垫,1个弹垫等)	套	4	乙供
NO.	Name	Type	Unit	QTY.	Note
1	Post Insulator	35kV	set	4	Fushun Electric Procelain Manufacturing Co., Ltd. Listed in B60011S-D0207
2	Bolt (for equipment installation)	M16, Hot-dip galvanizing with Nuts, 2 Flat Pads, 1 Spring Pad, etc.	set	16	
3	Copper strand wire	150mm²	m	20	
4	Copper lug	DTM-150	set	4	
5	Exothermic welding point	A: 150mm²copper strand;B: 120mm²copper strand	set	4	
6	Bolt (for grounding)	M14x45, Hot-dip galvanizing with Nuts, 2 Flat Pads, 1 Spring Pad, etc.	set	4	

巴基斯坦默蒂亚里—拉合尔±660kV直流输电工程

±660kV HVDC Project from Matiari to Lahore in Pakistan

NATIONAL TRANSMISSION & DESPATCH COMPANY (NTDC) LIMITED PAKISTAN

CONTRACTOR 国家电网 STATE GRID 中国电力技术装备有限公司 CHINA ELECTRIC POWER EQUIPMENT AND TECHNOLOGY CO.,LTD.

拉合尔±660kV换流站

±660kV Lahore Converter Station

设计阶段 PHASE: 施工图 Detailed Design

M L H V D C - L C S - C E T - D D - E C - 0 2 0 8 - 0 0 6 A

	姓名 Name	日期 Date
设计 Designed	唐华	2018.12.30
校核 Checked	苏斌	2018.12.30
审核 Reviewed	段强	2018.12.30
批准 Approved	张伟	2018.12.30

SC交流滤波器小组35kV支柱绝缘子设备安装图

SC AC Filter Group 35kV Post Insulator Installation Diagram

比例 Scale: 1:10 | 图号 DWG NO.: B60011S-D0208-006 | 版本 REV.: A

420X594

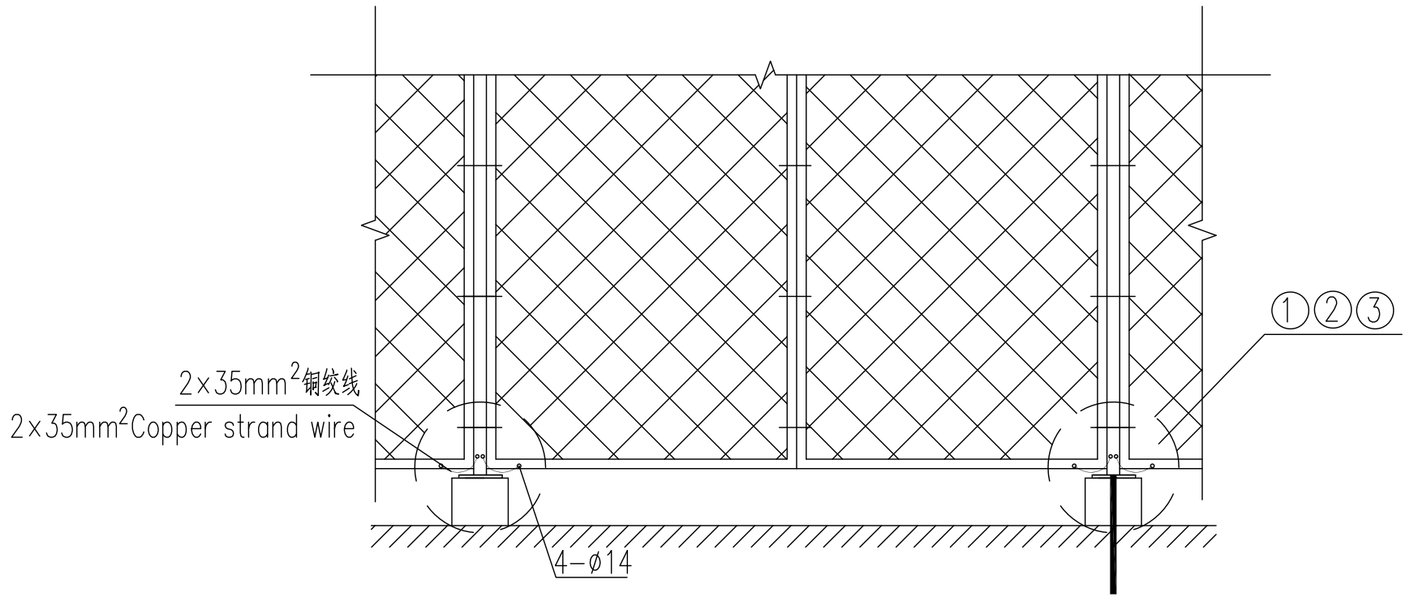

滤波器围栏接地图

Filter fence grounding diagram

材 料 表

Table of Equipment and materials

序号	名　称	型号及规格	单位	数量 SC	备　注
1	铜绞线	35mm²	米	35	用于滤波器围栏间跳接　乙供
2	铜线鼻	DT-35	套	80	用于滤波器围栏间跳接　乙供
3	螺栓	M8x45，热镀锌 （附螺帽，2个平垫，1个弹垫等）	套	120	用于滤波器围栏间跳接 用于滤波器围栏立柱接至水平接地网　乙供
4	铜绞线	50mm²	米	110	乙供
5	铜线鼻	DT-50	套	40	用于滤波器围栏立柱接至水平接地网　乙供
6	放热焊点	50mm²铜绞线与120mm²铜绞线焊接	个	40	乙供
NO.	Name	Type	Unit	QTY. SC	Note
1	Copper strand wire	35mm²	m	35	For filter fence connection
2	Copper lug	DT-35	set	80	For filter fence connection
3	Bolt	M8x45, Hot-dip galvanizing with Nuts, 2 Flat Pads, 1 Spring Pad, etc.	set	120	For filter fence connection For filter fence column to earthing grid
4	Copper strand wire	50mm²	m	110	
5	Copper lug	DT-50	set	40	For filter fence column to earthing grid
6	Exothermic welding point	A: 50mm² copper strand B: 120mm² copper strand	set	40	

说明：

1.滤波器围栏应多点接至水平接地网，接地点间间距不大于10m，接地采用50mm²铜绞线。

2.滤波器网栏通过35mm²铜绞线与网栏立柱连接，保证滤波器围栏电气连接的连续性。

Note:

1. The filter fence should be connected to the earthing grid at multiple points. The spacing between the grounding points should be no more than 10m. The grounding conductor should be 50mm² copper stranded wire.

2. The filter fence is connected to the fence column by 35mm² copper stranded wire to ensure the continuity of the electrical connection.

巴基斯坦默蒂亚里—拉合尔±660kV直流输电工程

±660kV HVDC Project from Matiari to Lahore in Pakistan

NATIONAL TRANSMISSION & DESPATCH COMPANY (NTDC) LIMITED PAKISTAN

CONTRACTOR 国家电网 STATE GRID 中国电力技术装备有限公司 CHINA ELECTRIC POWER EQUIPMENT AND TECHNOLOGY CO.,LTD.

拉合尔±660kV换流站

±660kV Lahore Converter Station

设计阶段 PHASE：施工图 Detailed Design

M L H V D C - L C S - C E T - D D - E C - 0 2 0 8 - 0 0 7 A

	姓名 Name	日期 Date
设计 Designed	唐华	2018.12.30
校核 Checked	高威	2018.12.30
审核 Reviewed	段强	2018.12.30
批准 Approved	张伟	2018.12.30
比例 Scale	1:10	图号 DWG NO.

SC交流滤波器小组围栏接地图

SC AC Filter Group Fence Grounding Diagram

B60011S-D0208-007　版本 REV. A

420X594

材料表
Table of Equipment and materials

序号	名称	型号及规格	单位	数量 02	数量 03	数量 04	数量 05	数量 06	数量 07	数量 每组	数量 全站	备注
1	铜绞线	150mm^2	米	90	45	35	30	20		220	1760	乙供
2	铜绞线	50mm^2	米						110	110	880	乙供
3	铜线鼻	DTM-150	套	30	9	18	18	4		79	632	乙供
4	铜铝过渡线鼻子	DTL-150	套			3				3	24	乙供
5	放热焊接点	150mm^{2}铜绞线与120mm^{2}铜绞线焊接	个	12	6	21	6	4		49	392	乙供
6	放热焊接点	150mm^{2}铜绞线与150mm^{2}铜绞线焊接	个	6	3					9	72	乙供
7	放热焊接点	50mm^{2}铜绞线与120mm^{2}铜绞线焊接	个						40	40	320	乙供
8	螺栓(接地用)	M14x45,热镀锌(附螺帽,2个平垫,1个弹垫等)	套	30	9	21	18	4		82	656	乙供
9	螺栓(接地用)	M8x45,热镀锌(附螺帽,2个平垫,1个弹垫等)	套						120	120	960	乙供
10	螺栓(设备安装用)	M30x75,热镀锌(附螺帽,2个平垫,1个弹垫等)	套			36				36	288	乙供
11	螺栓(设备安装用)	M6x50,热镀锌(附螺帽,2个平垫,1个弹垫等)	套				12			12	96	乙供
12	螺栓(设备安装用)	M16x75,热镀锌(附螺帽,2个平垫,1个弹垫等)	套					16		16	128	乙供
13	螺栓(设备安装用)	M22x80,热镀锌(附螺帽,2个平垫,1个弹垫等)	套	12						12	96	乙供
14	铜绞线	35mm^2	米						35	35	280	乙供
15	铜线鼻	DT-35	套						80	80	640	乙供
16	铜线鼻	DT-50	套						40	40	320	乙供

NO.	Name	Type	Unit	QTY. 02	QTY. 03	QTY. 04	QTY. 05	QTY. 06	QTY. 07	QTY. per group	QTY. whole Station	Note
1	Copper strand wire	150mm^2	m	90	45	35	30	20		220	1760	Supplied by Constructor
2	Copper strand wire	50mm^2	m						110	110	880	Supplied by Constructor
3	Copper lug	DTM-150	set	30	9	18	18	4		79	632	Supplied by Constructor
4	Copper-Aluminum Terminal	DTL-150	set			3				3	24	Supplied by Constructor
5	Exothermic welding point	A: 150mm^{2}copper strand; B: 120mm^{2}copper strand	set	12	6	21	6	4		49	392	Supplied by Constructor
6	Exothermic welding point	A: 150mm^{2}copper strand; B: 150mm^{2}copper strand	set	6	3					9	72	Supplied by Constructor
7	Exothermic welding point	A: 50mm^{2}copper strand; B: 120mm^{2}copper strand	set						40	40	320	Supplied by Constructor
8	Bolt (for grounding)	M14x45, Hot-dip galvanizing with Nuts, 2 Flat Pads, 1 Spring Pad, etc.	set	30	9	21	18	4		82	656	Supplied by Constructor
9	Bolt (for grounding)	M8x45, Hot-dip galvanizing with Nuts, 2 Flat Pads, 1 Spring Pad, etc.	set						120	120	960	Supplied by Constructor
10	Bolt (for equipment installation)	M30x75, Hot-dip galvanizing with Nuts, 2 Flat Pads, 1 Spring Pad, etc.	set			36				36	288	Supplied by Constructor
11	Bolt (for equipment installation)	M6x50, Hot-dip galvanizing with Nuts, 2 Flat Pads, 1 Spring Pad, etc.	set				12			12	96	Supplied by Constructor
12	Bolt (for equipment installation)	M16x75, Hot-dip galvanizing with Nuts, 2 Flat Pads, 1 Spring Pad, etc.	set					16		16	128	Supplied by Constructor
13	Bolt (for equipment installation)	M22x80, Hot-dip galvanizing with Nuts, 2 Flat Pads, 1 Spring Pad, etc.	set	12						12	96	Supplied by Constructor
14	Copper strand wire	35mm^2	m						35	35	280	Supplied by Constructor
15	Copper lug	DT-35	set						80	80	640	Supplied by Constructor
16	Copper lug	DT-50	set						40	40	320	Supplied by Constructor
17												

巴基斯坦默蒂亚里—拉合尔±660kV直流输电工程
±660kV HVDC Project from Matiari to Lahore in Pakistan

NATIONAL TRANSMISSION & DESPATCH COMPANY (NTDC) LIMITED PAKISTAN

CONTRACTOR
国家电网 STATE GRID
中国电力技术装备有限公司 CHINA ELECTRIC POWER EQUIPMENT AND TECHNOLOGY CO.,LTD.

拉合尔±660kV换流站
±660kV Lahore Converter Station

设计阶段 PHASE: 施工图 Detailed Design

M L H V D C - L C S - C E T - D D - E C - 0 2 0 8 - 0 0 8 A

	姓名 Name	日期 Date
设计 Designed	唐华	2018.12.30
校核 Checked	高斌	2018.12.30
审核 Reviewed	段强	2018.12.30
批准 Approved	张伟	2018.12.30

部分材料汇总表
Partial Material Summary

比例 Scale: --
图号 DWG NO.: B60011S-D0208-008
版本 REV.: A

420X594